

CONNECT

telecommunications solutions inc.

Ultra-Lite System

Vaults

FEATURES AND BENEFITS

- Unaffected by freeze or thaw cycles
- 3 lifting points for easy removal
- Custom engraving with company name or logo on demand
- Non-slip checker plate pattern
- Available in Green or Gray

OVERVIEW

Connect's Ultra-Lite system is a superior alternative to traditional HDPE plastic, cast iron or polymer concrete options on the market today. The system is made of an OldCastle's Duralite vault body and Connect's proprietary Ultra-Lite cover. The innovative material and design of the cover offer over 50% weight reduction versus concrete. This solution is engineered to withstand heavy loads and provide a durable solution for the protection of your network infrastructure. Because of its unique design and construction, the Ultra-Lite cover can be cut into to allow for the installation of cabinets without weakening its Tier22 performance.

SPECIFICATIONS

Property	Value
Material	Composite
Wall type	Straight
Performance	Medium duty, heavy duty
Rating	Tier 22



CONTACT

Email: csr@connect-telcom.com

Head Office: 519-748-4411

100 Hollinger Crescent
Kitchener, On
N2Z 2K3

www.connect-telcom.com

Spec Sheet Revision #1 July 2023

CONNECT
telecommunications solutions inc.

Ultra-Lite System

Vaults

Complete system weight and dimensions

Dimensions	Cover Weight	18"Depth Body Weight	24"Depth Body Weight	36"Depth Body Weight
24" x 36"	27kg (67lbs)	26kgs (56lbs)	36kg (79lbs)	46kg (101lbs)
30" x 48"	48kg (106lbs)	41kg (90lbs)	51kg (112lbs)	67kg (147lbs)
36" x 60"	79kg (174lbs)	N/A	N/A	100kg (222lbs)
Load Rating: Tier 22 For use in non-deliberate vehicular traffic situations only. Weights and dimensions may vary slightly. Actual load rating is determined by the box and cover combination.				

OldCaslte Duralite Body Specifications

Model:	2436	3048	3660
Material:	Composite	Composite	Composite
Model:	24" W x 36" L	30" W x 48" L	36" W x 60" L
Weight :	18" Depth: 56lbs 24" Depth: 79lbs 36" Depth: 101lbs	18" Depth: 90lbs 24" Depth: 112lbs 36" Depth: 147lbs	18" Depth: N/A 24" Depth: N/A 36" Depth: 222lbs
Wall Type:	Straight	Straight	Straight
Performance:	Tier 22	Tier 22	Tier 22

Size	A	B	C
2436-18	28 5/16	39 15/16	18
2436-24	28 5/16	39 15/16	24
2436-36	28 5/16	39 15/16	36
3048-18	33-3/8	50-7/8	18
3048-24	33-3/8	50-7/8	24
3048-36	33-3/8	50-7/8	36
3660-36	63	39-5/8	36

** All sizes in inches

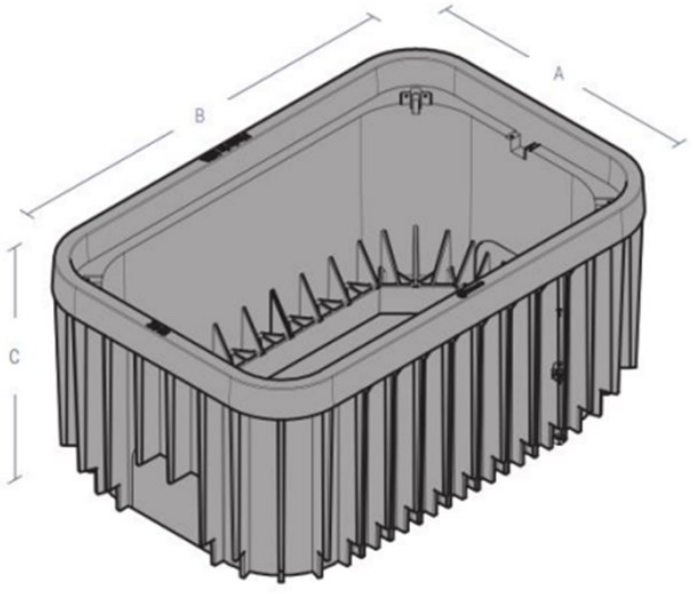

CONNECT
telecommunications solutions inc.

Selection Guide

Ultra-Lite System

24x36	SOLID	CUT-OUT	CUT-OUT
P/N:	**UL2436XX-GRN**	**UL2436XX-GRNCO**	**UL2436XX-GRNC-C/O**
Style:	1 Piece T-Cover	1 Piece T-Cover	2 Piece T-Cover
Cut-out Dimensions:	N/A	20 5" L x 10.0" W	11.875" L x 11.875" W
Cabinet Compatibility:	N/A	• Connect Fortress FC344412 • Connect Fortress PS343219 • Connect Fortress FN2331XX	• Connect Fortress 12"x12" Vault Assembly Pedestals • Connect Fortress FN2314XX • Connect Fortress FN2318XX

** Substitute XX for the vault body depth to complete the part number.

30x48	SOLID	CUT-OUT	CUT-OUT
P/N:	**UL3048XX-GRN**	**UL3048XX-GRNSDCO**	**UL3048XX-GRNCOCLRFLD**
Style:	2 Piece T-Cover	2 Pieces T-Cover	2 Pieces T-Cover
Cut-Out Dimensions:	N/A	16.0" L x 12.75" W	12.0" L x 10.0" W
Cabinet Compatibility:	N/A	• Connect Fortress FN2331XX • Connect Fortress FN2314XX • Connect FortressFN2318XX	• Clearfield 144F-432F FDH • Alpha 18"D x 28" W FBE

** Substitute XX for the vault body depth to complete the part number.

36x60	SOLID	CUT-OUT	CUT-OUT
P/N:	**UL366036-GRN**	**UL366036-GRNCO**	**UL366036-GRNMCO**
Style:	2 Piece T-Cover	2 Piece T-Cover	2 Piece T-Cover
Cut-Out Dimensions:	N/A	17.0" L x 18.0" W	23.0" L x 10.0" W
Cabinet Compatibility:	N/A	• Connect Fortress FN3031XX • Connect Fortress FN3631XX • Corning 72F-432F LCP	• Connect Fortress FC344412 • Connect Fortress PS343219

** Substitute XX for the vault body depth to complete the part number.