

Compact Fibre Distribution Hub

Fibre Connectivity

OVERVIEW

The Connect compact fibre distribution hub is a cabinet in a pedestal designed for OSP FTTx applications. The CFDH houses optical splitters that propagate signals from the Headend or Central Office to the distribution cable network that serves fibre to the customers' premises. The compact and modular design is a cost-effective solution; the splitter bays allow for any brand or size of cassette PLC splitters. The cabinet provides excellent fibre management system and the pedestal shell can be replaced shell in case of damage. This can be installed on select HDPE or composite ped plug vaults, also available at Connect.

FEATURES AND BENEFITS

- Non-Corrosive aluminum construction
- Small foot-print
- Telcordia GR-3125 compliant

SPECIFICATIONS

Item	96F
Cabinet dimensions H x W x D in	10 x 11 ¼ x 22⅝
Pedestal model	CF-CFDH Series
Pedestal Size	12x12x41
Connector type	SC APC
Fibre type in pigtails	SM G.652.D / G.657.A1
Splitter module capacity	2
Color	Light Green Powder Coat

ORDERING INFORMATION

Part Number	Description
CF-CFDH-096F-SCA-PVA	Pedestal Vault Assembly with 96F Compact Fiber Distribution Hub.

CONTACT

Email: csr@connect-telcom.com

Head Office: 519-748-4411

100 Hollinger Crescent
Kitchener, On
N2Z 2K3

www.connect-telcom.com

Spec Sheet Revision #1 November 2024

CONNECT
telecommunications solutions inc.

CONNECT

telecommunications solutions inc.

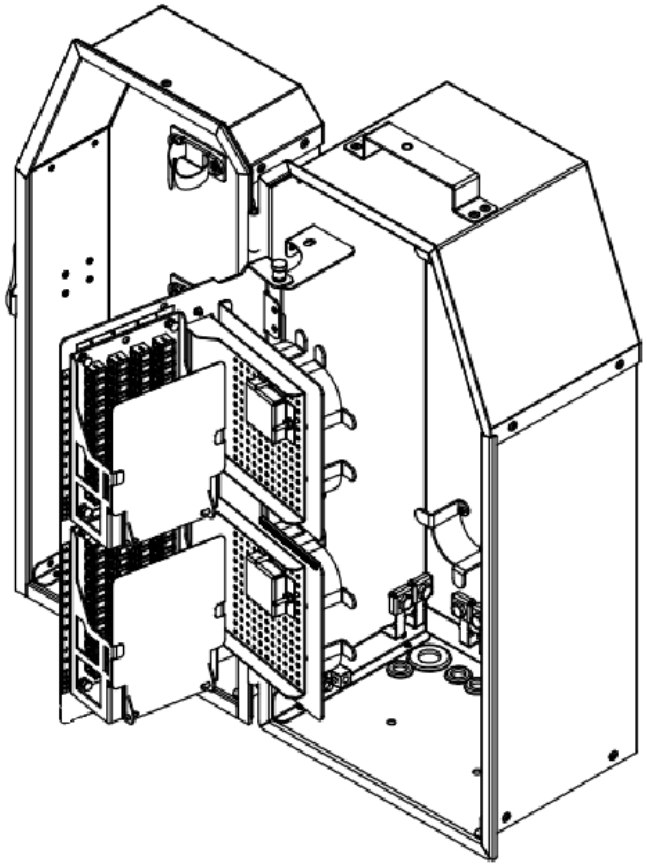

96 Fibre Model